Physics 344

Project 1A

The Nobel Prize in Physics 1939

was awarded to Ernest Lawrence "for the invention and development of the cyclotron and for results obtained with it, especially with regard to artificial radioactive elements". --Nobelprize.org

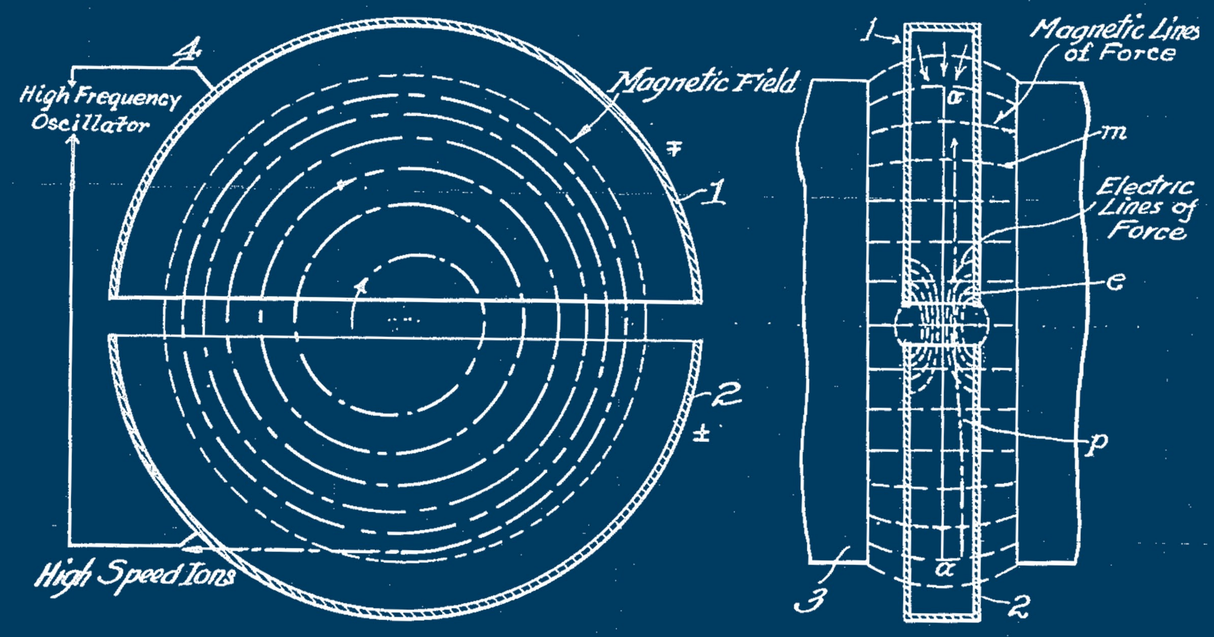

Diagram of cyclotron operation

Principle: Cyclotrons accelerate charged particle beams using a high frequency alternating voltage which is applied between the two "D"-shaped electrodes. An additional static magnetic field B is applied in perpendicular direction to the electrode plane, enabling particles to re-encounter the accelerating voltage many times at the same phase.

Advantages: The cyclotron was an improvement over the linear accelerators (linacs) that were available when it was invented, being more cost- and space-effective due to the iterated interaction of the particles with the accelerating field.

Importance: For several decades, cyclotrons were the best source of high-energy beams for nuclear physics experiments; several cyclotrons are still in use for this type of research. The results enable the calculation of various properties, such as the mean spacing between atoms and the creation of various collision products. Subsequent chemical and particle analysis of the target material may give insight into nuclear transmutation of the elements used in the target. Cyclotrons can also be used in particle therapy to treat cancer. Ion beams from cyclotrons can be used, as in proton therapy, to penetrate the body and kill tumors by radiation damage, while minimizing damage to healthy tissue along their path.

Conclusion: As a good beam source, cyclotrons played an fundamental role in nuclear physics experiments, artifical radioactive elements, cancer threapies etc. Although it has many limitations when the acelerated particles become fast enough that relativistic effects become important, it is still an important invention, without which today's physics would have much less achievements.

Ernest O. Lawrence

Chuxuan Chen